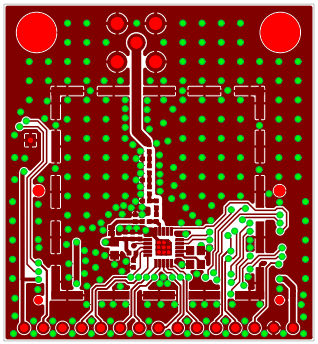

Top

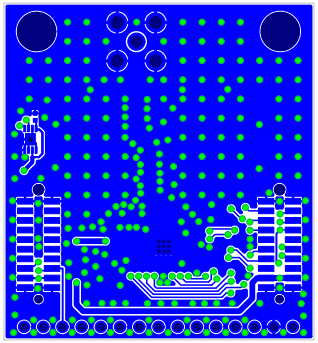

Bottom

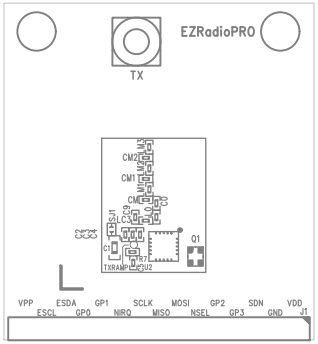
EZRadioPRO
TX
CM2
CM1
CM6
C8
C29
L3
J1
C33
C34
Q1
TXRAMP
U2
VPP
ESDA
GP1
SCLK
MOSI
GP2
SDN
VDD
ESCL
GP0
NIRQ
MISO
NSEL
GP3
GND
J1

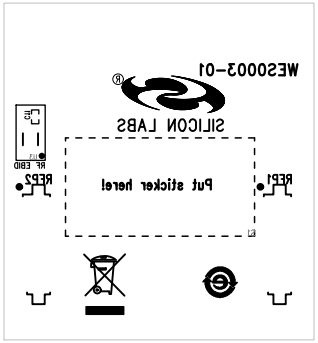
RF EBID
RFE2
Put sticker here!
RFE1
SILICON LABS
WE50003-01

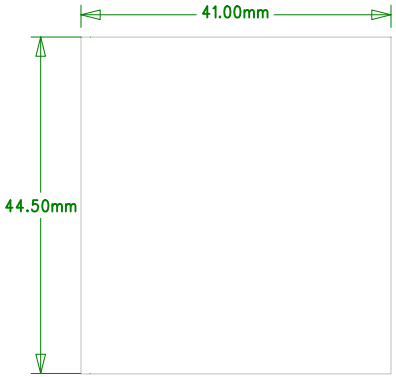
41.00mm
44.50mm